THIS DRAWING IN CONFIDENTIAL AND PROPRIETARY TO LOWE HARDWARE,
AND MAY NOT BE REPRODUCED, OR ANY PART USED THERE OF,
WITHOUT PRIOR EXPRESS WRITTEN PERMISSION.

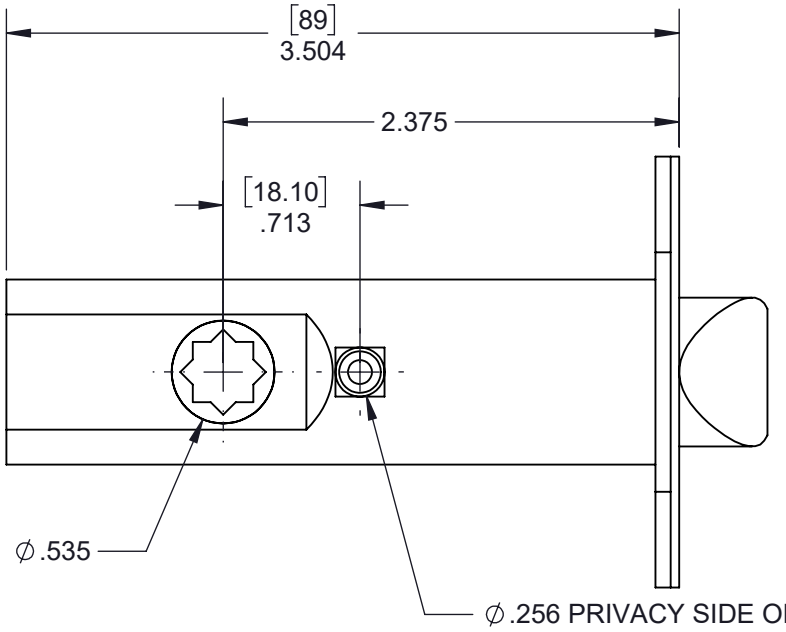

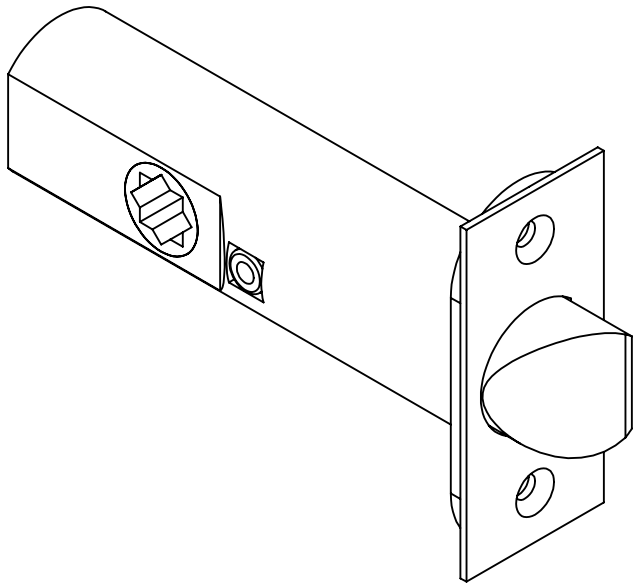

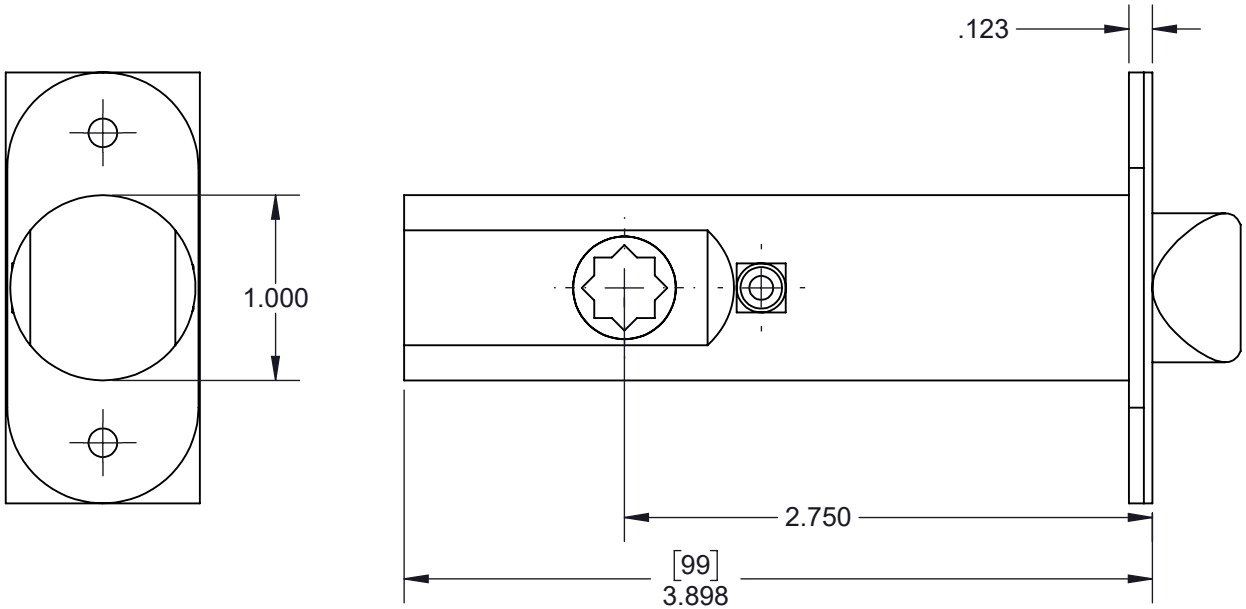

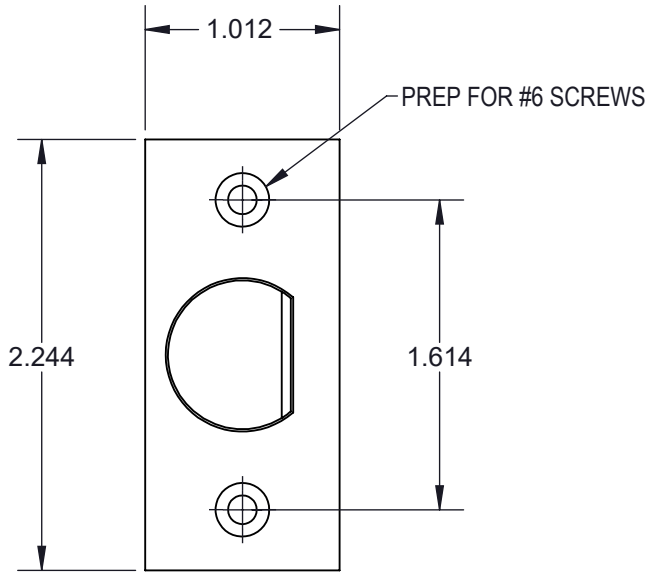

LOWE HARDWARE
5 GORDON DRIVE
ROCKLAND ME 04841
207 593 7405 FAX 207 226 2033
WWW.LOWE-HARDWARE.COM

File Name: **4320_TF**

DO NOT SCALE DRAWING