LOWE HARDWARE

No. 4320



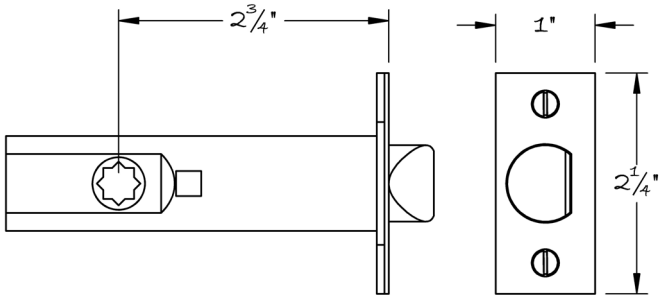

Available in all finishes.