This drawing in confidential and proprietary to Lowe Hardware,
and may not be reproduced, or any part used there of,
without prior express written permission.

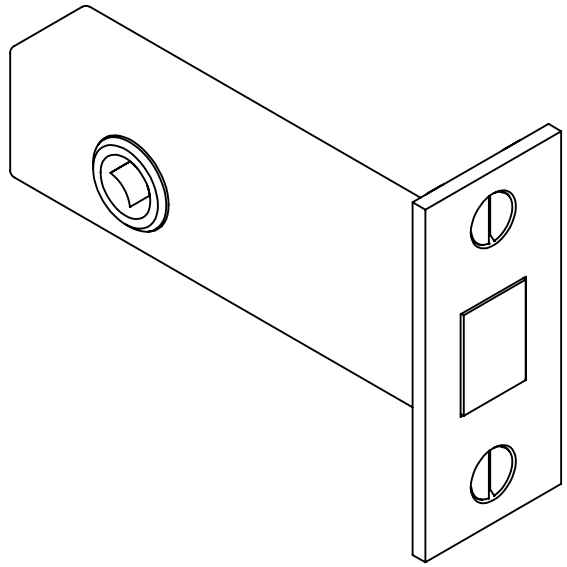

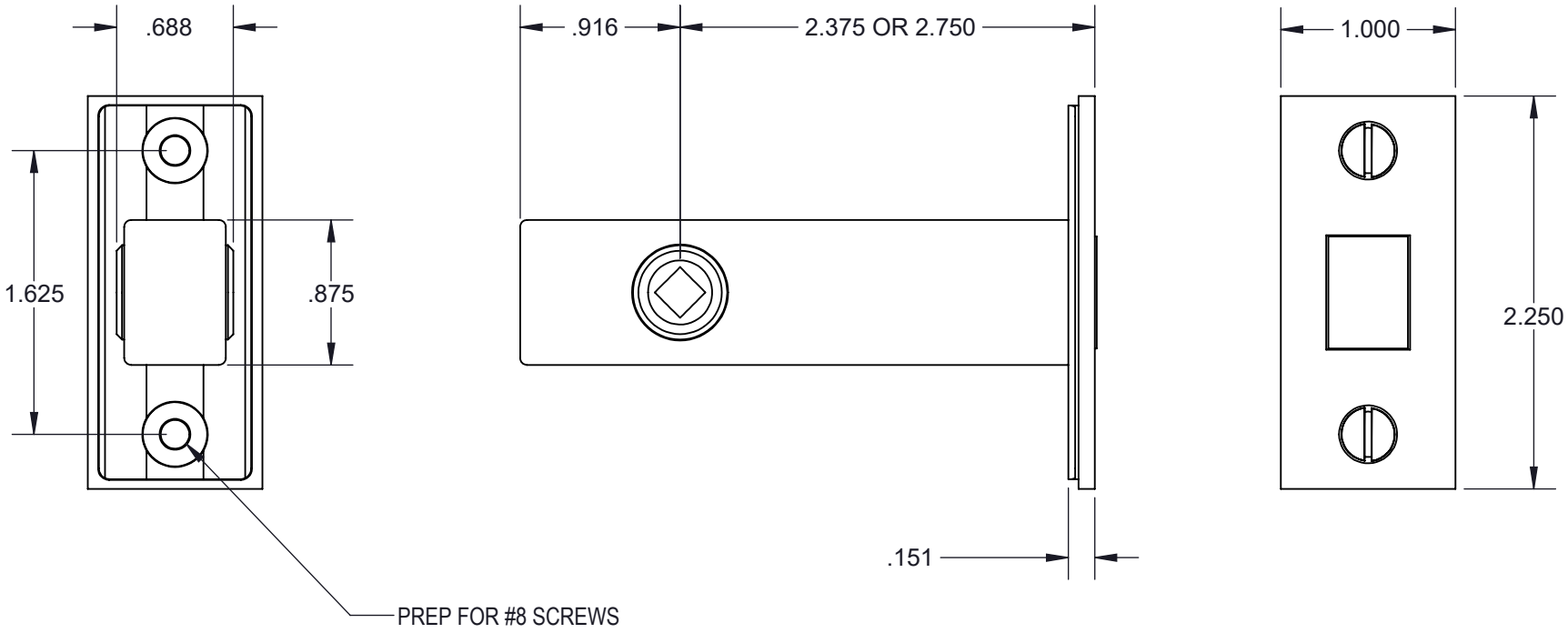

Lowe Hardware
5 Gordon Drive
Rockland ME 04841
207 593 7405 Fax 207 226 2033
www.lowe-hardware.com

File Name: **4313 TF**

DO NOT SCALE DRAWING