LOWE HARDWARE

No.4313

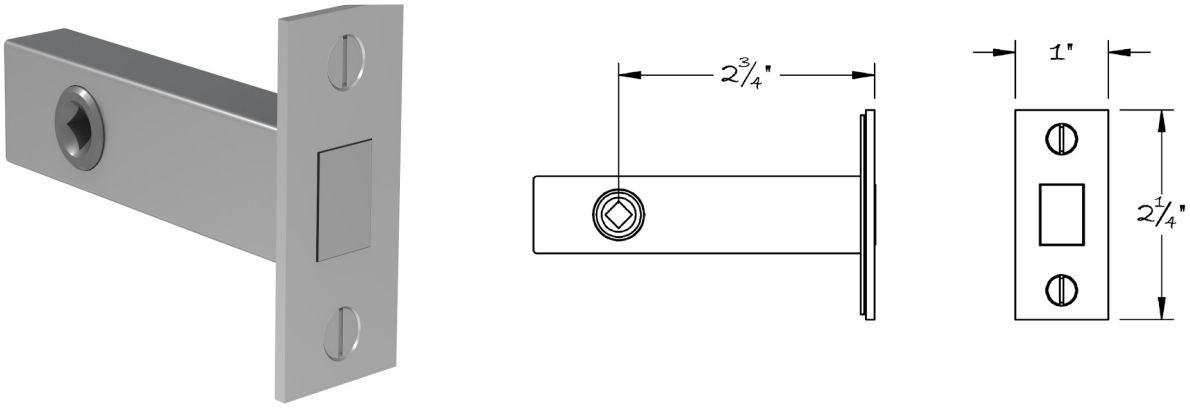

Lowe 4313 Deadbolt

Available in all finishes with 2 3/8" and 2 3/4" Backsets.