LOWE HARDWARE

No. 6524



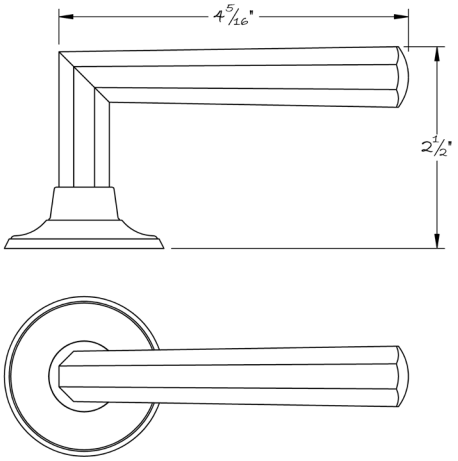

Lowe Hardware's No. #6524 lever.

Available in any of our yacht-quality electro plated or patinated finishes.